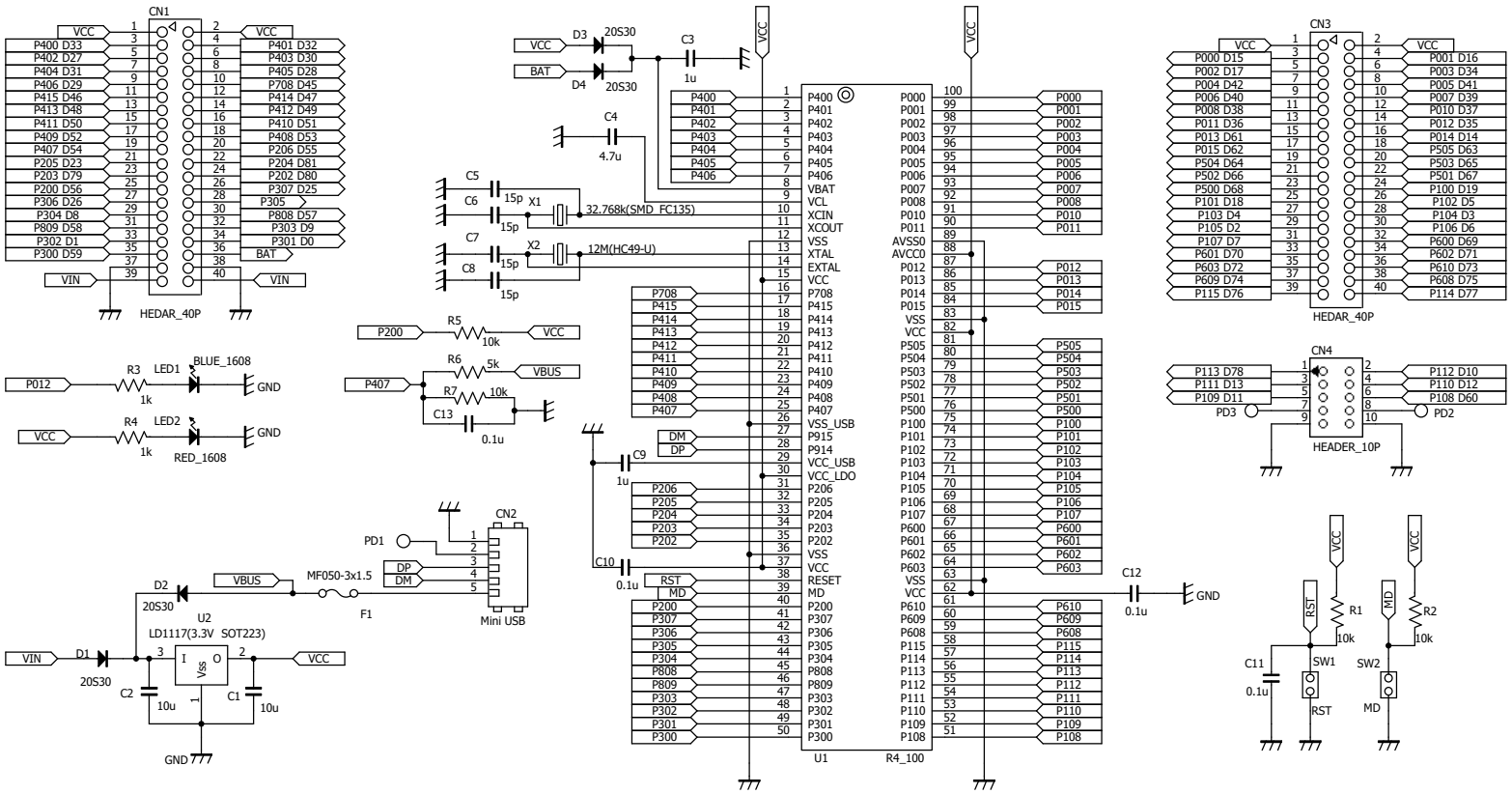

Drawn No		Title R4 100P	Rev RB
Checked by			
Approval by			
Drawn by	matsuura	Date:2025/8/23	MDSYSTEM